University of Science and Technology of Southern Philippines

Technology Promotions and Commercialization Office

PATENT SEARCH OVERVIEW & PATENT INFORMATION

Engr. Mark Lister V. Nalupa
ITSO Technical Expert
marklister.nalupa@ustp.edu.ph

P UM TM © ID

Learning Objectives

- Understand the importance of patent search
- Identify different types of patent search
- Explore the parts of a patent document; components of patent information
- Prepare initial patent search report

What is a Patent Search?

- A process of determining whether your invention is patentable.
- Searches granted patents and published patent applications for inventions that may be regarded as essential "prior art" references when filing for a patent.
- Provides a hint as to what facts of the patent are already accessible in the database regarding the new patent to be registered.

What is a Patent Search?

- **Patent search is a subset of the prior art search.**
  - Find patent documents relevant to your invention
  - Interpret the findings of your patent search

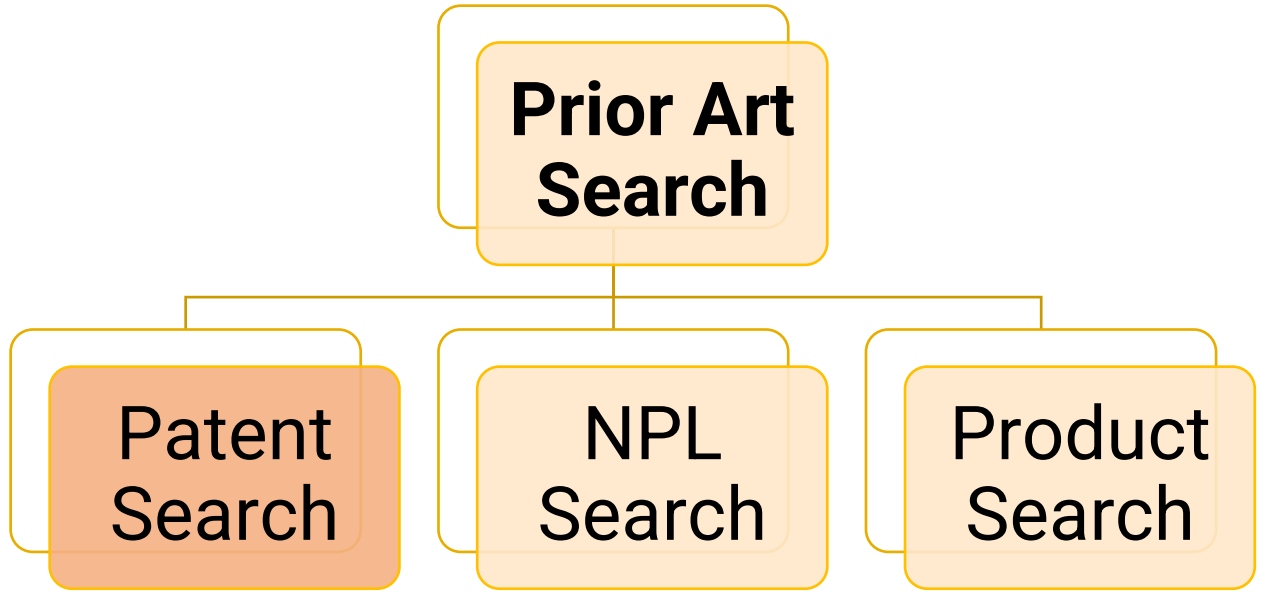

**NPL = non-patent literature*

IP Code, Chapter 2 Sec. 24.1

Prior art: Everything made available to the public anywhere in the world, before the filing date or the priority date of the application claiming the invention

Why is it Needed?

Evaluate previously disclosed invention (already patented, published)

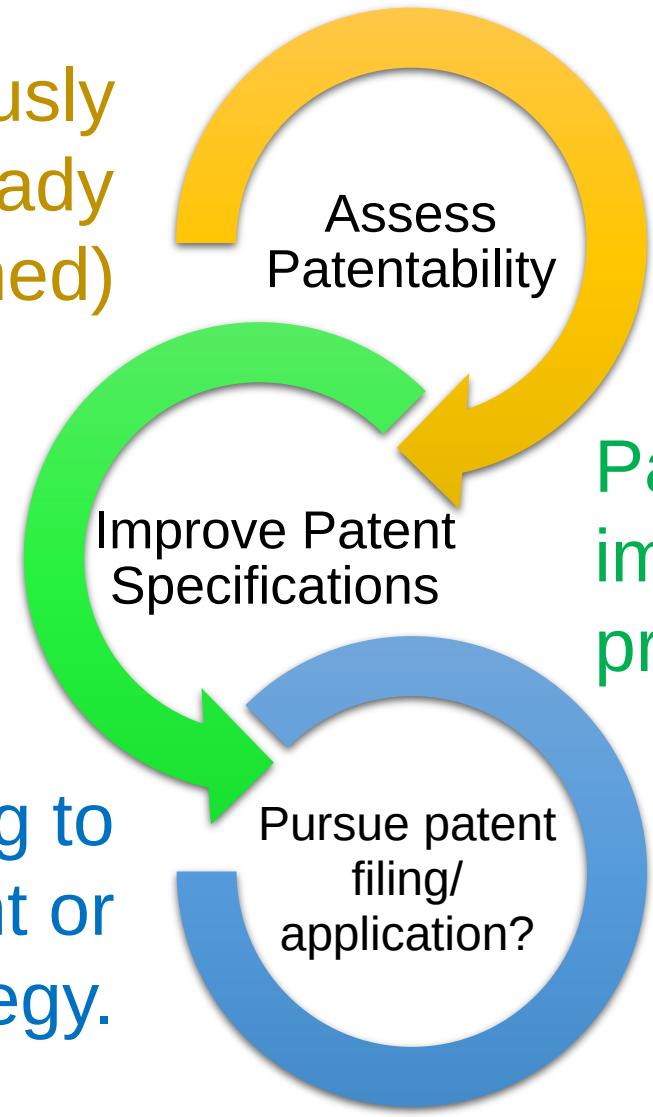

Patent specification improvement and increase probability to be granted

Help in decision making to whether file for a patent or make necessary strategy.

Types of Patent Search

- Freedom to Operate Search (FTO)
- Novelty/Patentability Search
- State-of-the Art Search
- Patent Landscape Search
- Validity/Invalidity Search

Freedom to Operate Search (Clearance Search)

PURPOSE: To prove that a proposed invention does not infringe any active patents.

***When*:**

Before a product is released or

Before process is used

***Scope*:**

Patents issued within the last 20 years (active patents).

Limited to a specific jurisdiction

Novelty Search/Patentability Search

- **Perform to reveal prior art that can affect the patenting of the invention**
- **Helps inventor assess if patent application would pass patentability requirements.**
- **Accomplished either before or during the invention's development or before filing for the patent application.**
- **Considers both patents and publications as prior art or any publicly available information.**

State-of-the Art Search (SOA)

- ***A market survey/study*** **to identify the existence of similar technologies in the market**

- **Helps inventors/innovators/investors to measure the strength and weakness of the similar technology in a particular area.**

- **Determine if the technology could survive in the market.**

Patent Landscape Search

- **More detailed and deeper than SOA**
- **Presents visual representations of trends in relevant literature and technology**
- **Shows patterns of patenting activity or innovation**
- **Useful when new markets are to be explored**

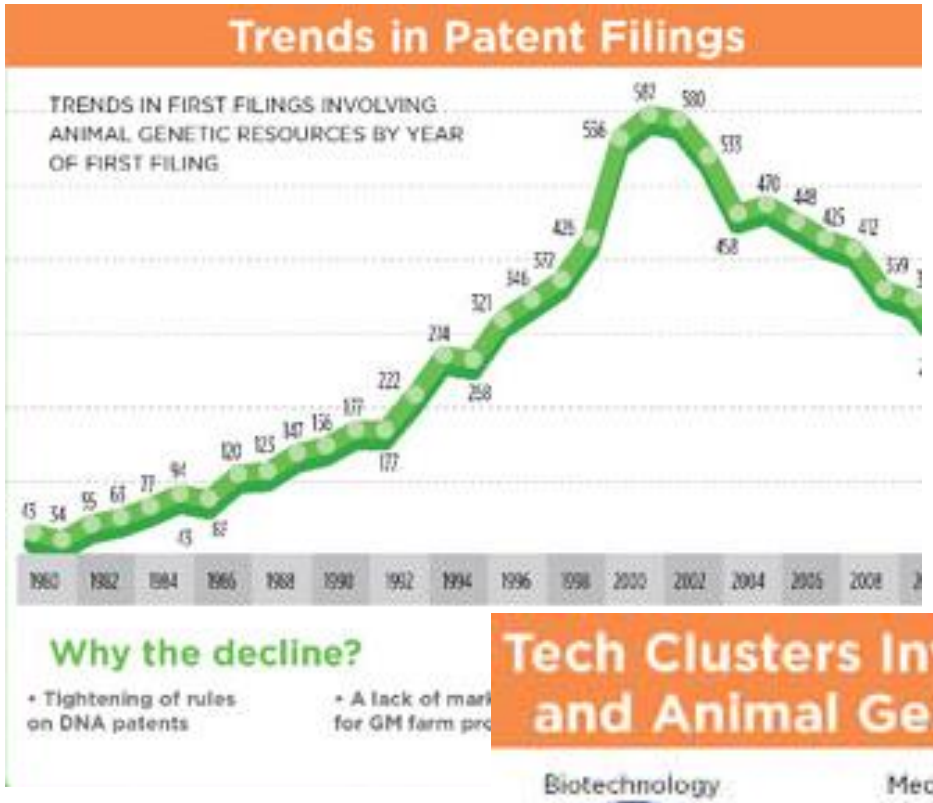

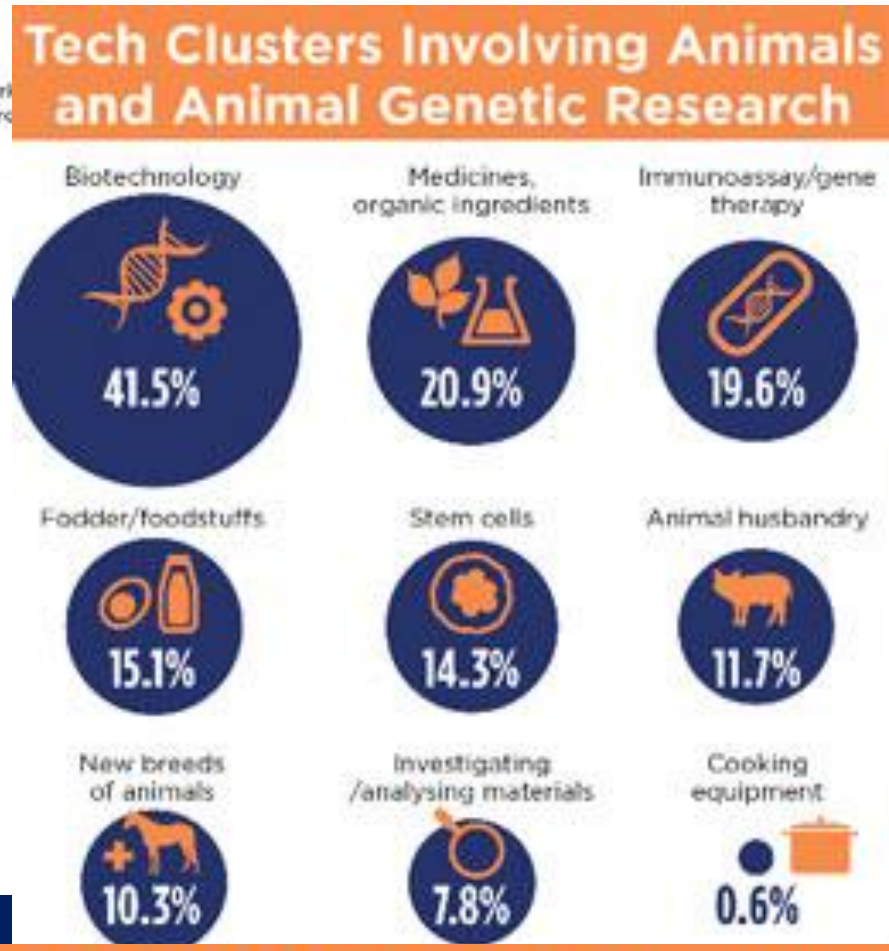

Categories of Patent Activity related to food and agriculture

Validity or Invalidity Search

(Enforcement Readiness Search or Opposition Search)

- **Undertaken to determine if it is possible to invalidate another's patent that could pose an infringement risk or when a competitor has accused you of infringing their patent.**

Patent Search Flowchart

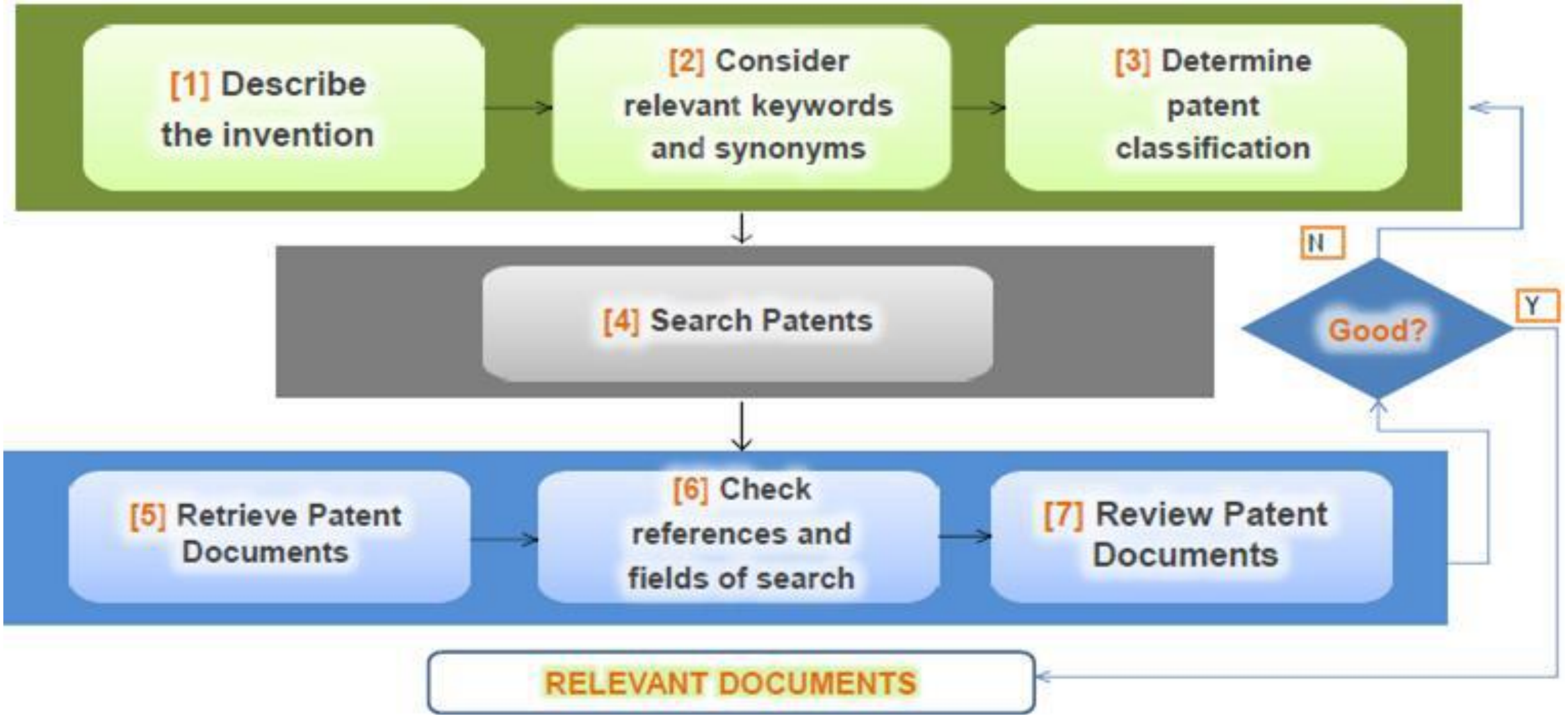

Evaluating Results

- **"A" document defining the general state of the art which is not considered to be of particular relevance**

- **"X" document of particular relevance; the claimed invention cannot be considered novel or cannot be considered to involve an inventive step when the document is taken alone**

- **"Y" document of particular relevance; the claimed invention cannot be considered to involve an inventive step when the document is combined with one or more other such documents, such combination being obvious to a person skilled in the art**

Where Can Patent Information be Found?

Free and publicly accessible patent databases of national and regional patent offices

IPOPHL Patent Search
WIPO Patentscope
EPO Espacenet
USPTO Patent Full-Text DB & Patent Application Full-Text DB
JPO JPlatPat

Database by commercial providers (by subscription/fee-paying basis)

Derwent Innovation by Clarivate
Orbit Intelligence by Questel
Patbase by Minesoft
PatSeer by Gridlogics

Non-profit providers

The Lens by Cambia, an independent non-profit institute

Professional search services

IPOPHL's IPSDD search and analytics services

The Art of Searching

Searching is not easy

- ✓ The correct result is very seldom, if ever, immediately found
- ✓ Many iterations may be required to obtain a suitable result
- ✓ Searching is an art that is learned over time

Understand the invention

- ✓ Identify the essential features of the invention
- ✓ Think of different embodiments of the invention

IPOPHL Patent Search Report

IP Search and Documentation Division
Documentation, Information and Technology Transfer Bureau
IPOPHL

PS101
ONLINE CERTIFICATE PROGRAM ON PATENT INFORMATION SEARCH
2017

Annex - A
PATENT SEARCH REPORT

Title
Filing Date
Abstract (*Not more than 150 words*)
International Patent Classification
Keywords

SEARCH STRINGS AND DATABASES

Database	Search String	Number of Hits

DOCUMENTS CONSIDERED TO BE RELEVANT
(Citation of Documents, with indication, where appropriate, of the relevant pages)

Title

Filing Date

Abstract

International Patent Classification

Keywords

Search Strings & Databases

Documents Considered Relevant

IPOPHL Patent Search Report

IP Search and Documentation Division
Documentation, Information and Technology Transfer Bureau
IPOPHL

PS101
ONLINE CERTIFICATE PROGRAM ON PATENT INFORMATION SEARCH
2017

Category	Document Information			Relevant to Claim No.
	Patent No.	Title	Publication Date	

* **Special Categories of Cited Documents:**

"A" document defining the general state of the art which is not considered to be of particular relevance

"X" document of particular relevance; the claimed invention cannot be considered novel or cannot be considered to involve an inventive step when the document is taken alone

"Y" document of particular relevance; the claimed invention cannot be considered to involve an inventive step when the document is combined with one or more other such documents, such combination being obvious to a person skilled in the art

Note: Further references not indicated in this search report may be cited during substantive examination.

CERTIFICATION	
Search Conducted by:	Search Reviewed by: **Engr. Gladdy Christie H. Compasan** **ITSO Manager**

Certification

What is Patent Information?

- technical information found in patent documents

- patent documents consist of
  - ✓ **bibliographic data (front page or first page)**
  - ✓ **claims**
  - ✓ **detailed description**
  - ✓ **drawings**

Source: https://www.epo.org/en/searching-for-patents/helpful-resources/first-time-here

Components of Patent Document

[12] UTILITY MODEL REGISTRATION [11] Registration No.: 2/2022/050009

[45] Issue date: 25 March 2022 (25.03.2022)

[54]	Title:	CONCENTRATED SOLAR THERMAL PROCESSOR
[72]	Maker(s):	MAGOMNANG, Antonio-Abdu Sami M. (Cagayan de Oro City, Misamis Oriental, PH); MATERNAL, Jude Andrea Eve P. (Cagayan de Oro City, Misamis Oriental, PH); PEREZ, Jonathan H. (Cagayan de Oro City, Misamis Oriental, PH); ROSALES, Marvin V. (Cagayan de Oro City, Misamis Oriental, PH) and REYES, Reyvencer T. (Cagayan de Oro City, Misamis Oriental, PH)
[71]	Applicant(s):	University of Science and Technology of Southern Philippines (Cagayan de Oro City, Misamis Oriental, PH)
[22]	Filing Date:	4 January 2022 (04.01.2022)
[43]	Publication date:	25 March 2022 (25.03.2022)
[21]	Application No.:	2/2022/050009
[30]	Foreign Application Priority Data:	NONE
[51]	International Class :	A23N12/08 (2006.01); F26B15/00 (2006.01)

[57] **ABSTRACT**

A novel combination of drying and roasting technology that utilizes concentrated solar irradiance as a source of thermal energy. It is composed of two compartments interconnected together to maximize solar flux heat energy; one chamber is for roasting and the other is for drying. The oven roaster is a rotating drum-type that serves as the solar flux receiver while the dryer comprises a plurality of trays and baffles vertically spaced-apart relation. A temperature control is integrated into the system; heating element for additional heat and fan as a temperature regulator. The system is powered by a solar panel assembly comprises of a solar panel, voltage regulator, and batteries.

Description, Claims, Abstract: 9 page(s). Drawings: 5 sheet(s)

Examiner: C. D. Garcia

Attorney/Agent: COMPASAN, Gladdy Christie H.

Document No: 2023/6517

Bibliographic Data

CONCENTRATED SOLAR THERMAL PROCESSOR

CLAIMS:

1. A concentrated solar thermal processor system comprising:

an enclosed frame (1) that serves as the structural support of said system, and is internally divided for roasting and drying chambers;

a dividing member (2) is provided to separate the interior of the enclosed frame (1) and is being made to have a gap at the upper portion to allow airflow from the roasting chambers to the drying chamber;

at least four caster wheels (3) mounted at the bottom corners of said enclosed frame (1) ;

a solar PV panel (5) being mounted at a tilted angle at the top portion of said enclosed frame (1);

a roasting chamber door (7) pivotably mounted in one of the widest sides of said enclosed frame (1);

a drying chamber door (9) pivotably mounted in one of the widest sides of said enclosed frame (1), beside the roasting chamber door (7);

a scorch collecting drawer (11) slidingly mounted in one of the widest sides of said enclosed frame (1), below the roasting chamber door (7);

an axial fan (13) being mounted directly under the drying chamber of said enclosed frame (1);

a solar aperture (15) placed in one of the narrower sides of said enclosed frame (1), where the roasting chamber is located;

an adjustable intake vent (17) placed in space above said solar aperture (15) and having a disc valve;

a vent adjusting lever (19) configured to act as the hinge of a valve in said adjustable intake vent (17) and used to manually adjust by hand the opening of said adjustable intake vent (17);

a pair of roller supporting members (21) fixed inside the roasting chamber of said enclosed frame (1);

a flange bearing (23) fixed at the back portion of the enclosed frame (1) where the roasting chamber is located;

a driven sprocket (25) having a built-in shaft and is being mounted to said enclosed frame (1) through said flange bearing (23);

7

Claims

CONCENTRATED SOLAR THERMAL PROCESSOR

TECHNICAL FIELD OF THE UTILITY MODEL

The utility model relates to technologies relates to agriculture roasting and drying machine and more particularly to a combined solar roasting and drying machine.

BACKGROUND OF THE UTILITY MODEL

Many local farmers are still using the conventional methods for post-harvest processing. Open sun drying is very unhygienic and time-consuming while the use of biomass aside that it contributing to deforestation it is also inefficient, uncontrollable, laborious, tedious, energy, and time-consuming. These methods exposed operators to an unhygienic environment and direct exposure to heat radiations and smoke. Many technological efforts have been made to facilitate the rural communities by mechanizing the roasting process but all rely on fuels or electric energy. On the other hand, existing roasting/drying technology is not adaptable for the growers of developing countries due to high initial investment and rapidly escalating prices of non-renewable energy resources.

Hence, this scenario creates a tremendous need to discover such alternate resources for heat generation which are non-depleting and environment-friendly, i.e., solar thermal energy. The outcome is that it would give chance for small and medium-sized enterprises farmers to compete with the international market and commands better prices than raw agricultural products. Consequently, there is the priority need of the food processors for affordable equipment to increase production efficiency and compliance to standard requirements that will enable them to become more competitive in both local and foreign markets.

It is, therefore, an objective of the present utility model to provide a concentrated solar thermal processor for roasting and drying various agricultural products.

Another objective of the present utility model is to design a concentrated solar thermal processor that is practical and inexpensive, and which can offer a wide range of applications for food processing

Still, an object of the present utility model is to provide a concentrated solar thermal processor that eliminates the use of electricity and fuels.

2

Detailed Description

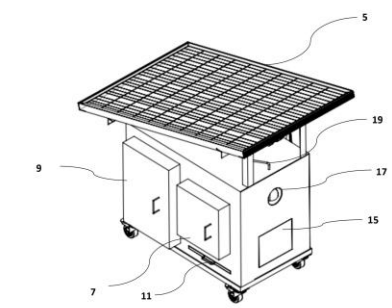

FIG. 1

University of Science and Technology of Southern Philippines
Applicant

By:
Gladdy Christie H. Compasan
ITSO Manager - USTP

Drawing

Sample Philippine Patent Document

Bibliographic Data

Kind of Document

INID Codes
("Internationally agreed Numbers for the Identification of [bibliographic] Data")

- **Some important INID codes:**
  - (12) Kind of Document
  - (10) or (11) Publication number
  - (45) Issued date or date of grant
  - (54) Title
  - (72) Inventor name
  - (71) Applicant name
  - (22) Filing date
  - (43) Publication date
  - (21) Application number
  - (30) or (31) Priority data
  - (51) International Patent Classification
  - (57) Abstract
  - (19) Patent office or organization publishing the document

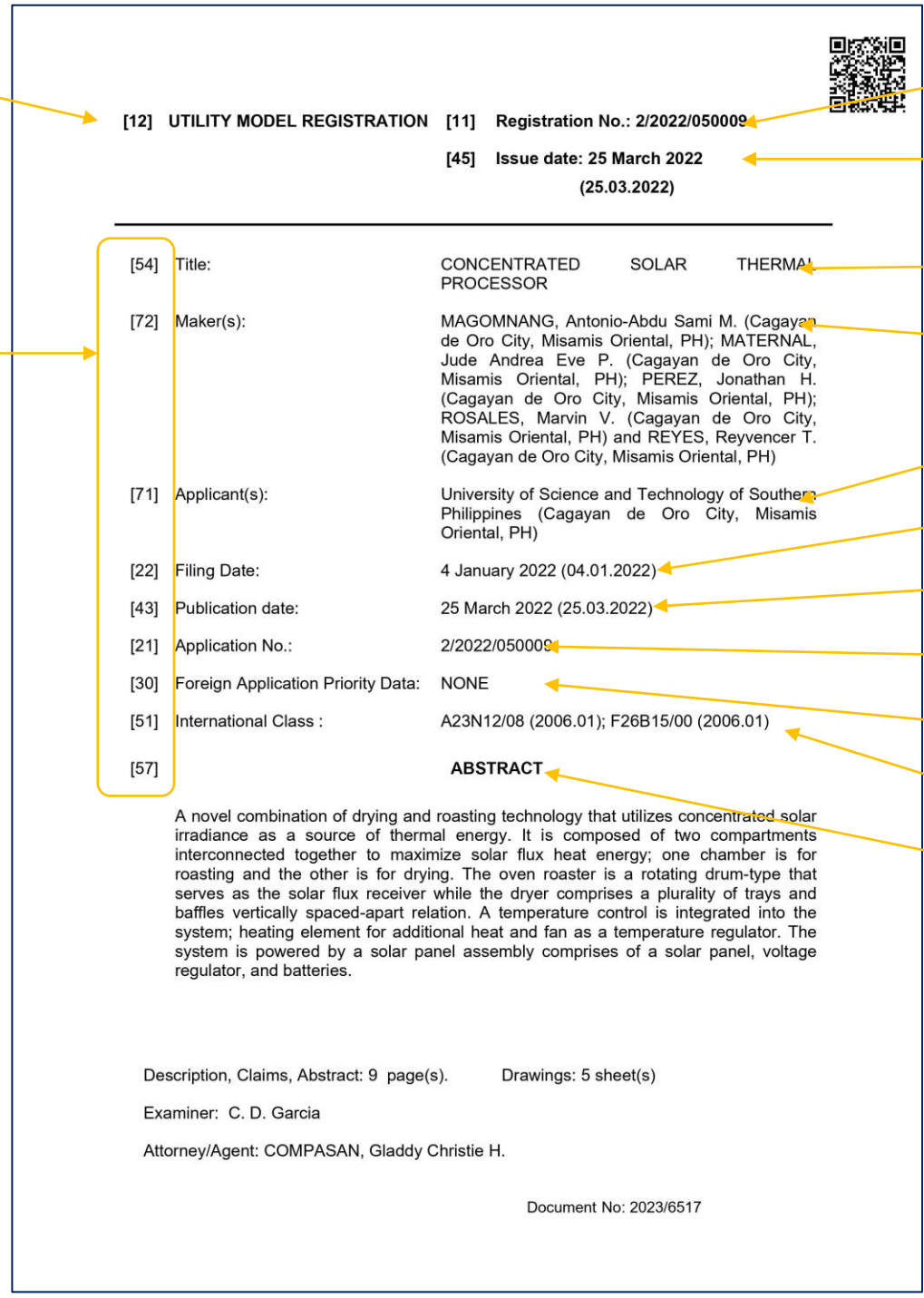

[12] UTILITY MODEL REGISTRATION [11] Registration No.: 2/2022/050009

[45] Issue date: 25 March 2022
(25.03.2022)

[54] Title: CONCENTRATED SOLAR THERMAL PROCESSOR

[72] Maker(s): MAGOMNANG, Antonio-Abdu Sami M. (Cagayan de Oro City, Misamis Oriental, PH); MATERNAL, Jude Andrea Eve P. (Cagayan de Oro City, Misamis Oriental, PH); PEREZ, Jonathan H. (Cagayan de Oro City, Misamis Oriental, PH); ROSALES, Marvin V. (Cagayan de Oro City, Misamis Oriental, PH) and REYES, Reyvencer T. (Cagayan de Oro City, Misamis Oriental, PH)

[71] Applicant(s): University of Science and Technology of Southern Philippines (Cagayan de Oro City, Misamis Oriental, PH)

[22] Filing Date: 4 January 2022 (04.01.2022)

[43] Publication date: 25 March 2022 (25.03.2022)

[21] Application No.: 2/2022/050009

[30] Foreign Application Priority Data: NONE

[51] International Class : A23N12/08 (2006.01); F26B15/00 (2006.01)

[57] ABSTRACT

A novel combination of drying and roasting technology that utilizes concentrated solar irradiance as a source of thermal energy. It is composed of two compartments interconnected together to maximize solar flux heat energy; one chamber is for roasting and the other is for drying. The oven roaster is a rotating drum-type that serves as the solar flux receiver while the dryer comprises a plurality of trays and baffles vertically spaced-apart relation. A temperature control is integrated into the system; heating element for additional heat and fan as a temperature regulator. The system is powered by a solar panel assembly comprises of a solar panel, voltage regulator, and batteries.

Description, Claims, Abstract: 9 page(s). Drawings: 5 sheet(s)

Examiner: C. D. Garcia

Attorney/Agent: COMPASAN, Gladdy Christie H.

Document No: 2023/6517

Publication Number

Issued Date

Title

Inventor

Applicant

Filing Date

Publication Date

Application Number

Priority Data

Classification

Abstract

Bibliographic Data

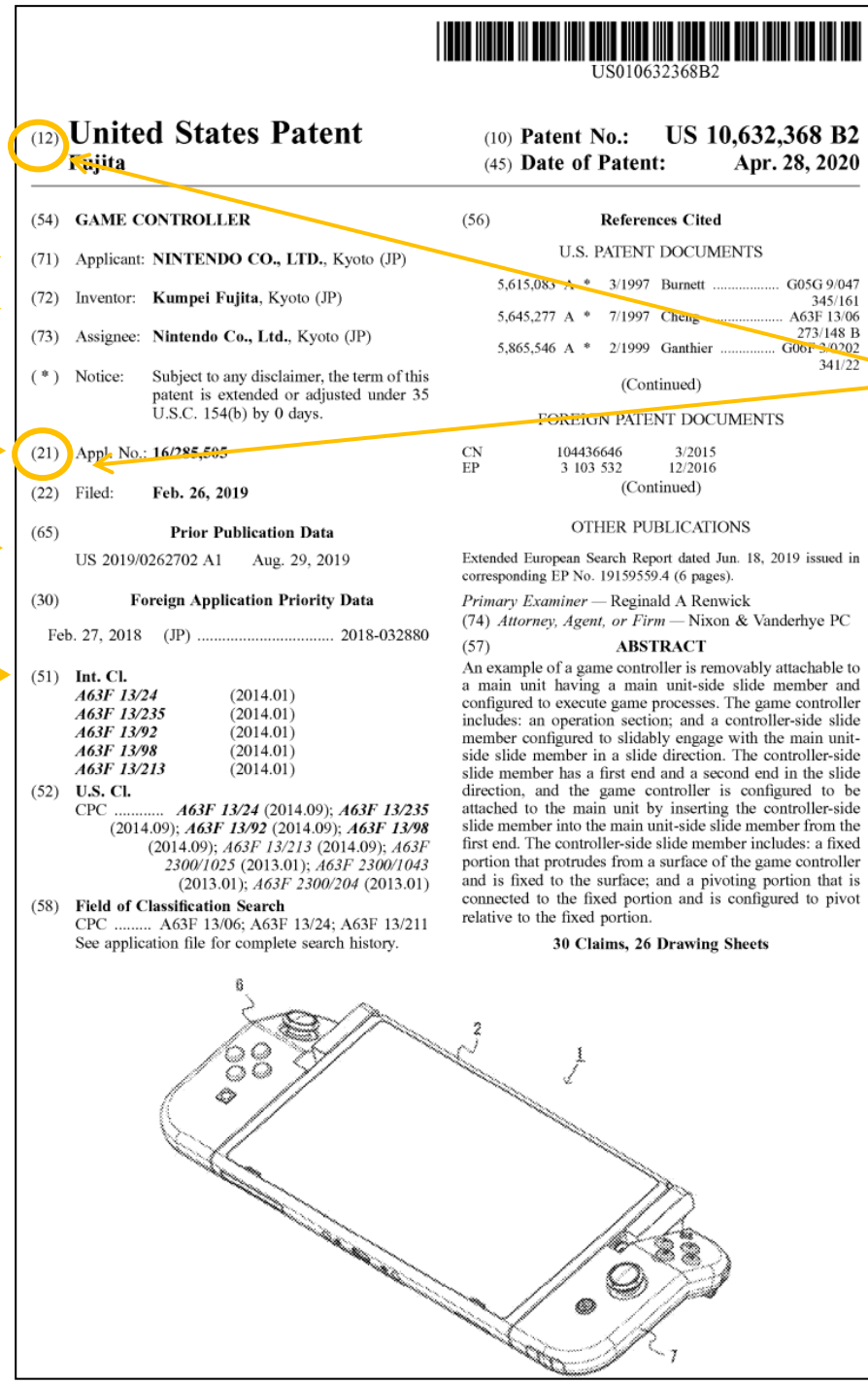

US010632368B2

(12) **United States Patent**
Fujita

(10) **Patent No.: US 10,632,368 B2**
(45) **Date of Patent: Apr. 28, 2020**

(54) **GAME CONTROLLER**

(71) Applicant: **NINTENDO CO., LTD.**, Kyoto (JP)

(72) Inventor: **Kumpei Fujita**, Kyoto (JP)

(73) Assignee: **Nintendo Co., Ltd.**, Kyoto (JP)

(*) Notice: Subject to any disclaimer, the term of this patent is extended or adjusted under 35 U.S.C. 154(b) by 0 days.

(21) Appl. No.: **16/285,505**

(22) Filed: **Feb. 26, 2019**

(65) **Prior Publication Data**

US 2019/0262702 A1 Aug. 29, 2019

(30) **Foreign Application Priority Data**

Feb. 27, 2018 (JP) 2018-032880

(51) **Int. Cl.**
A63F 13/24 (2014.01)
A63F 13/235 (2014.01)
A63F 13/92 (2014.01)
A63F 13/98 (2014.01)
A63F 13/213 (2014.01)

(52) **U.S. Cl.**
CPC ***A63F 13/24*** (2014.09); ***A63F 13/235*** (2014.09); ***A63F 13/92*** (2014.09); ***A63F 13/98*** (2014.09); *A63F 13/213* (2014.09); *A63F 2300/1025* (2013.01); *A63F 2300/1043* (2013.01); *A63F 2300/204* (2013.01)

(58) **Field of Classification Search**
CPC A63F 13/06; A63F 13/24; A63F 13/211
See application file for complete search history.

(56) **References Cited**

U.S. PATENT DOCUMENTS

5,615,083 A * 3/1997 Burnett G05G 9/047 345/161
5,645,277 A * 7/1997 Cheng ..... A63F 13/06 273/148 B
5,865,546 A * 2/1999 Ganthier G06F 3/0202 341/22

(Continued)

FOREIGN PATENT DOCUMENTS

CN 104436646 3/2015
EP 3 103 532 12/2016

(Continued)

OTHER PUBLICATIONS

Extended European Search Report dated Jun. 18, 2019 issued in corresponding EP No. 19159559.4 (6 pages).

Primary Examiner — Reginald A Renwick
(74) *Attorney, Agent, or Firm* — Nixon & Vanderhye PC

(57) **ABSTRACT**

An example of a game controller is removably attachable to a main unit having a main unit-side slide member and configured to execute game processes. The game controller includes: an operation section; and a controller-side slide member configured to slidably engage with the main unit-side slide member in a slide direction. The controller-side slide member has a first end and a second end in the slide direction, and the game controller is configured to be attached to the main unit by inserting the controller-side slide member into the main unit-side slide member from the first end. The controller-side slide member includes: a fixed portion that protrudes from a surface of the game controller and is fixed to the surface; and a pivoting portion that is connected to the fixed portion and is configured to pivot relative to the fixed portion.

30 Claims, 26 Drawing Sheets

Publication Number

Issued Date

Title

Applicant

Inventor

INID Codes

Filing Date

Priority Data

Classification

Abstract

Sample US Patent Document Front Page

Bibliographic Data

JP 2019-146737 A 2019. 9. 5

(19)日本国特許庁(JP)　(12)公開特許公報(A)　(11)特許出願公開番号
特開2019-146737
(P2019-146737A)
(43)公開日　令和1年9月5日(2019. 9. 5)

(51)Int.Cl.			F I			テーマコード（参考）
A63F	13/24	(2014.01)	A63F	13/24		5B020
A63F	13/92	(2014.01)	A63F	13/92		
A63F	13/23	(2014.01)	A63F	13/23		
G06F	3/02	(2006.01)	G06F	3/02	400	

審査請求 未請求　請求項の数 34　ＯＬ　（全 49 頁）

(21)出願番号　特願2018-32880 (P2018-32880)
(22)出願日　平成30年2月27日 (2018. 2. 27)

(71)出願人　000233778
任天堂株式会社
京都府京都市南区上鳥羽鉾立町１１番地１
(74)代理人　100158780
弁理士　寺本　亮
(74)代理人　100121359
弁理士　小沢　昌弘
(74)代理人　100130269
弁理士　石原　盛規
(72)発明者　藤田　訓平
京都府京都市南区上鳥羽鉾立町１１番地１
任天堂株式会社内

Ｆターム(参考)　5B020 AA12　AA17　CC06　CC12　DD02
DD03　KK14　KK22

(54)【発明の名称】ゲームコントローラ

(57)【要約】　（修正有）
【課題】形状に関する設計上の自由度を向上する。
【解決手段】ゲームコントローラは、ゲーム処理を実行可能であって本体装置側スライド部材を備える本体装置に装着可能である。ゲームコントローラは、操作部と、本体装置側スライド部材に対して所定のスライド方向にスライド可能に係合することが可能なコントローラ側スライド部材３０２とを備える。ゲームコントローラは、コントローラ側スライド部材のスライド方向における一端と他端とのうちで、少なくとも一端からコントローラ側スライド部材３０２を本体装置側スライド部材に対して挿入することによって、ゲームコントローラは本体装置に対して装着されることが可能である。コントローラ側スライド部材３０２は、ゲームコントローラの所定面から突出して設けられ、当該所定面に対して固定された固定部３０３と、固定部３０３に接続され、当該固定部３０３に対して回動が可能な回動部３０４とを備える。
【選択図】図１１

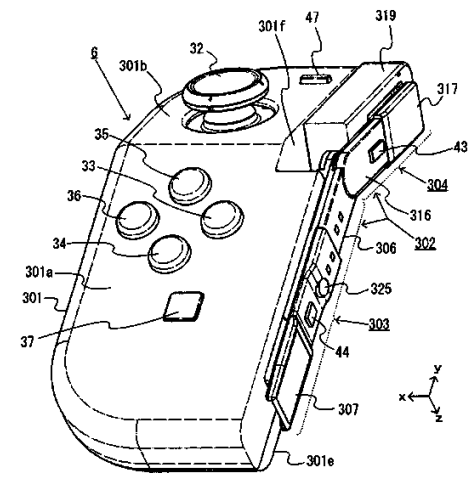

Sample Japanese Patent Document Front Page

Country/ Organization Codes

- **Some examples:**
  - **US**9724601 (B2) → **United States of America**
  - **CN**110559650 (B) → **China**
  - **JP**6612183 (B2) → **Japan**
  - **EP**3103528 (B1) → **European Patent Office**
  - **WO**2016199887 (A1) → **World Intellectual Property Organization**

Claims

CONCENTRATED SOLAR THERMAL PROCESSOR

CLAIMS:

1. A concentrated solar thermal processor system comprising:

an enclosed frame (1) that serves as the structural support of said system, and is internally divided for roasting and drying chambers;

a dividing member (2) is provided to separate the interior of the enclosed frame (1) and is being made to have a gap at the upper portion to allow airflow from the roasting chambers to the drying chamber;

at least four caster wheels (3) mounted at the bottom corners of said enclosed frame (1) ;

a solar PV panel (5) being mounted at a tilted angle at the top portion of said enclosed frame (1);

a roasting chamber door (7) pivotably mounted in one of the widest sides of said enclosed frame (1);

a drying chamber door (9) pivotably mounted in one of the widest sides of said enclosed frame (1), beside the roasting chamber door (7);

a scorch collecting drawer (11) slidingly mounted in one of the widest sides of said enclosed frame (1), below the roasting chamber door (7);

an axial fan (13) being mounted directly under the drying chamber of said enclosed frame (1);

a solar aperture (15) placed in one of the narrower sides of said enclosed frame (1), where the roasting chamber is located;

an adjustable intake vent (17) placed in space above said solar aperture (15) and having a disc valve;

a vent adjusting lever (19) configured to act as the hinge of a valve in said adjustable intake vent (17) and used to manually adjust by hand the opening of said adjustable intake vent (17);

a pair of roller supporting members (21) fixed inside the roasting chamber of said enclosed frame (1);

a flange bearing (23) fixed at the back portion of the enclosed frame (1) where the roasting chamber is located;

a driven sprocket (25) having a built-in shaft and is being mounted to said enclosed frame (1) through said flange bearing (23);

- **heart of a patent document**
- **define the scope of legal protection**
- **demarcate in words the boundary of the invention**
- **only the technology covered in the claims is protected by the patent**

Source: https://www.wipo.int/wipo_magazine/en/2006/01/article_0007.html

Detailed Description

CONCENTRATED SOLAR THERMAL PROCESSOR

TECHNICAL FIELD OF THE UTILITY MODEL

The utility model relates to technologies relates to agriculture roasting and drying machine and more particularly to a combined solar roasting and drying machine.

BACKGROUND OF THE UTILITY MODEL

Many local farmers are still using the conventional methods for post-harvest processing. Open sun drying is very unhygienic and time-consuming while the use of biomass aside that it contributing to deforestation it is also inefficient, uncontrollable, laborious, tedious, energy, and time-consuming. These methods exposed operators to an unhygienic environment and direct exposure to heat radiations and smoke. Many technological efforts have been made to facilitate the rural communities by mechanizing the roasting process but all rely on fuels or electric energy. On the other hand, existing roasting/drying technology is not adaptable for the growers of developing countries due to high initial investment and rapidly escalating prices of non-renewable energy resources.

Hence, this scenario creates a tremendous need to discover such alternate resources for heat generation which are non-depleting and environment-friendly, i.e., solar thermal energy. The outcome is that it would give chance for small and medium-sized enterprises farmers to compete with the international market and commands better prices than raw agricultural products. Consequently, there is the priority need of the food processors for affordable equipment to increase production efficiency and compliance to standard requirements that will enable them to become more competitive in both local and foreign markets.

It is, therefore, an objective of the present utility model to provide a concentrated solar thermal processor for roasting and drying various agricultural products.

Another objective of the present utility model is to design a concentrated solar thermal processor that is practical and inexpensive, and which can offer a wide range of applications for food processing

Still, an object of the present utility model is to provide a concentrated solar thermal processor that eliminates the use of electricity and fuels.

0A103JY03YN2022T1O 03 Mar 2022 01:56:01 PM
Page 3 of 15
Concentrated Solar Thermal Processor (amendment).pdf

- **teaches how to make and use the invention**
- **specifies problem to be solved, prior art, inventive idea, embodiment of the technology**
- **section in detailed description**
  1. **Title of the Invention/ Utility Model**
  2. **Technical Field of the Invention/ Utility Model**
  3. **Background of the Invention/ Utility Model**
  4. **Summary of the Invention/ Utility Model**
  5. **Brief Descriptions of Drawings**
  6. **Detailed Description of the Invention/ Utility Model**

Source: https://www.wipo.int/wipo_magazine/en/2006/01/article_0007.html

Drawings

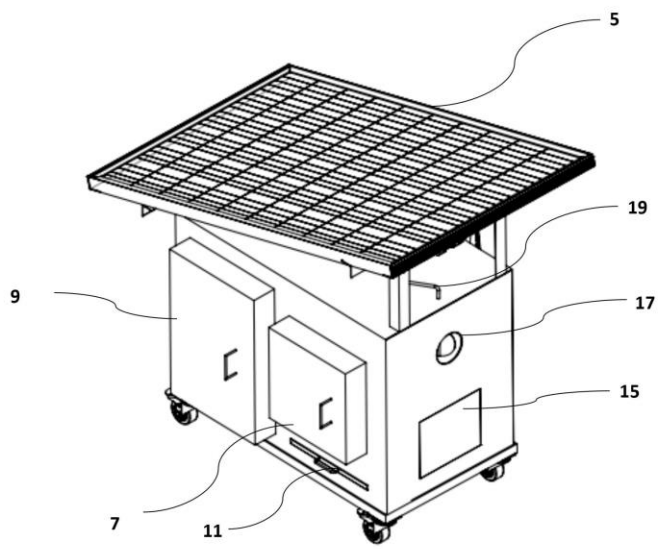

FIG. 1

University of Science and Technology of Southern Philippines
Applicant

By:
Gladdy Christie H. Compasan
ITSO Manager - USTP

0A103JY03YN2022T1O 03 Mar 2022 01:56:01 PM
Page 11 of 15
Concentrated Solar Thermal Processor (amendment).pdf

- **aid for understanding the invention**
- **provides reference signs or numerals for the elements of the invention that correspond to the detailed description**
- **may cover:**
  1. **flowsheets**
  2. **diagrams**
  3. **graphic representations**

Source: https://www.wipo.int/wipo_magazine/en/2010/02/article_0008.html

Activity 1.1: Patent Search Report (Title)

Instructions:

- **Write the title of your technology in the "Title" subsection of the patent search report template.**

- **Consider the following when composing the title for your technology :**
  - **keep it short and specific, ideally under 15 words**
  - **avoid the use of fancy names**
  - **make it descriptive of the technology**

Activity 1.1: Patent Search Report (Title)

Instructions:

- **Refer to the examples below for guidance:**
  - ✓ **Nutritional Food Scale System and Method for Diet Management**
  - ✓ **Cloud-Based Poultry Monitoring System and Methods**
  - ✓ **Formulation of Banana Pancake Pre-mix**
  - ✓ **Method for Preparing Dehydrated Potato Products**
  - ✓ **Concentrated Solar Thermal Processor**
  - ✓ **Grinding Machine**
  - ✓ **Distance Metering Device for Tricycle**
  - ✓ **Steaming and Heating Apparatus**

Patent Search Report

Annex - A
PATENT SEARCH REPORT

Title
Filing Date
Abstract (*Not more than 150 words*)
International Patent Classification
Keywords

SEARCH STRINGS AND DATABASES

Database	Search String	Number of Hits

DOCUMENTS CONSIDERED TO BE RELEVANT
(Citation of Documents, with indication, where appropriate, of the relevant pages)

Title

Activity 1.2: Patent Search Report (Abstract)

Instructions:

- **Write the abstract of your technology in the "Abstract" subsection of the patent search report template.**

- **Consider the following when composing the abstract for your technology :**
  - **ascertain quickly the character of the technology**
  - **not exceed 150 words**
  - **if modification, directed to the technical disclosure of the modification**
  - **if new, directed to the entire disclosure**
  - **if a machine, apparatus, or system, its organization and operation**
  - **if a chemical compound, its identify (structure) and preparation**
  - **if a mixture, its ingredients**
  - **if a process, the steps**
  - **exclude the merits or value of the invention or application**

Activity 1.2: Patent Search Report (Abstract)

Instructions:

- **Consider the following checklist when composing the abstract for your technology :**

If the invention is a(n)	Check here	The abstract should deal with:	If so, check here
Chemical compound		its identity (structure if appropriate); method of preparation, properties, uses	
Mixture		its nature, properties, use; essential ingredients (identify, function); proportion of ingredients, if significant; preparation	
Machine, apparatus, system		its nature, use; construction, organization; operation	
Process or operation		its nature and characterizing features; material and conditions employed; product, if significant; nature of and relationship between the steps, if more than one	
If the disclosure involves alternatives		the abstract should deal with the preferred alternative and identify the others if this can be done succinctly; if this cannot be done, it should mention that they exist and whether they differ substantially from the preferred alternative	

Activity 1.2: Patent Search Report (Abstract)

Consider the following guidelines when composing the abstract for your technology :

- **Title of the Invention**
- **Technical Field/ Features**
- **Manner of Solving the Technical Problem**
- **The Main Use or Uses**

Activity 1.2: Patent Search Report (Abstract)

Example Abstract

- A **biocompatible polymeric composition** for **cross linking in-situ in a wound** is disclosed comprising one or more **polyanionic polymers such as alginates or hyaluronates**, **able to cross-linked the surface of the wound** and one or more **polycationic polymer such as chitosan or dextran** that **assists in the solidification process without applying pressure**.

Activity 1.2: Patent Search Report (Abstract)

Stroll type bicycle

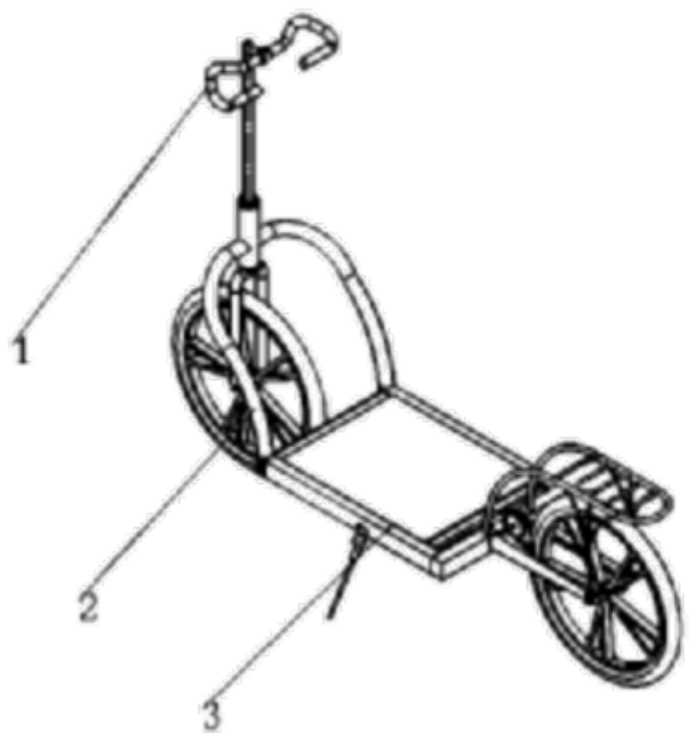

The invention relates to a stroll type bicycle and belongs to the technical field of exercise machines. The stroll type bicycle comprises a bicycle navigation system, a bicycle frame system, a bicycle drive system and a bicycle braking system. The bicycle navigation system is installed at the front end of the bicycle frame system. The bicycle drive system is installed on the rear half portion of the bicycle frame system. The bicycle braking system is composed of a brake. Due to the fact that the stroll type bicycle is low in speed, the bicycle is braked through friction between the feet of a person and the ground. The experience of a single pedal type exercise bicycle is changed, the stroll type bicycle is combined with stroll fitness, a user can freely walk on the bicycle, and therefore the user is happy to use the stroll type bicycle for traveling in an environment-friendly way.

Activity 1.2: Patent Search Report (Abstract)

Procedure of Making Chicken Stew with Coconut Sap

ABSTRACT

This utility model discloses the procedure of making chicken stew with coconut sap comprising the steps of: cleaning, adding spices and condiments to dressed chicken, putting dressed chicken into a cooking vessel, adding coconut sap, cooking in high heat, simmering in low heat, adding vegetables, transferring in serving dish, garnishing and serving the chicken stew with coconut sap.

The procedure aims to produce a nutritious, protein-rich chicken stew with low glycemic index sauce.

Activity 1.2: Patent Search Report (Abstract for Food)

<TITLE OF THE INVENTION/ UTILITY MODEL; INDICATE *Scientific name* IF APPLICABLE>

Abstract of the Disclosure

<If invention>

The present invention discloses a <title of the invention>. The <title of the invention> comprises a <technical field/features by enumerating the compositions of the invention>. The <manner of solving the problem by discussing the steps of production/process>. The <main use/s of the invention>.

<If utility model>

The present utility model discloses a <title of the utility model>. The <title of the utility model> comprises a <technical field/features by enumerating the compositions/process of utility model>. The <manner of solving the problem>. The <main use/s of the utility model>.

Activity 1.2: Patent Search Report (Abstract for ICT Mechanical)

<TITLE OF THE INVENTION/ UTILITY MODEL; INDICATE *Scientific name* IF APPLICABLE>

Abstract of the Disclosure

<If invention>

The present invention discloses a <title of the invention>. The <title of the invention> comprises a <technical field/features by enumerating the parts or components of the invention>. The <manner of solving the problem by discussing the steps of operation/production/process/use>. The <main use/s of the invention>.

<If utility model>

The present utility model discloses a <title of the utility model>. The <title of the utility model> comprises a <technical field/features by enumerating the parts/components/use/steps/process of utility model>. The < manner of solving the problem>. The <main use/s of the utility model>.

Patent Search Report

Annex - A
PATENT SEARCH REPORT

Title
Filing Date
Abstract (*Not more than 150 words*)
International Patent Classification
Keywords

SEARCH STRINGS AND DATABASES

Database	Search String	Number of Hits

DOCUMENTS CONSIDERED TO BE RELEVANT
(Citation of Documents, with indication, where appropriate, of the relevant pages)

Abstract

Thank you for Listening!

Engr. Mark Lister V. Nalupa
ITSO Technical Expert
marklister.nalupa@ustp.edu.ph

P UM TM © ID